Precision TEC Controller as Arduino shield

R.X. 2016 http://hololaser.kwaoo.me

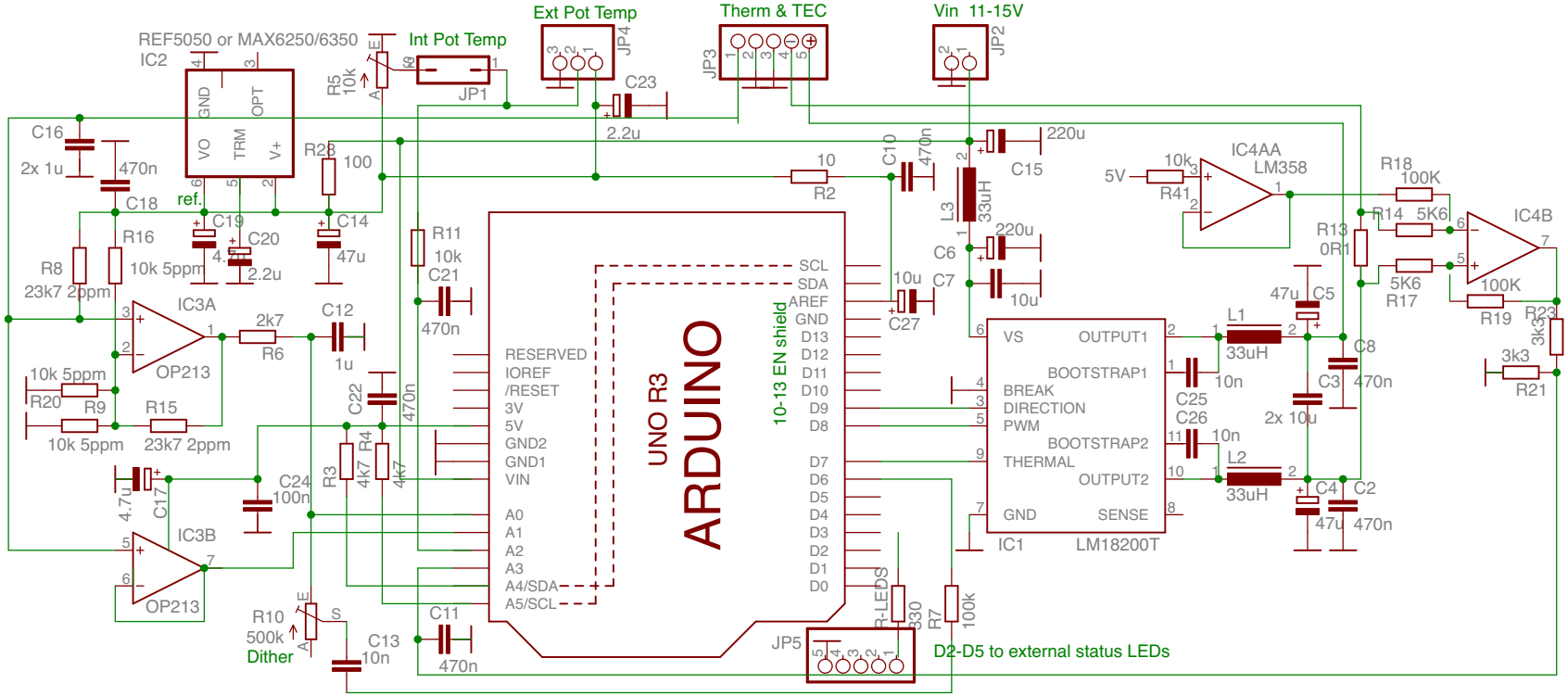

ArduinoTEC, Type LMD18200, Version 2.0 12-2016

Range=15-24C, Therm=10k@25C